OfficeSource®

PL 102GG, PL103GG, PL 105GG DESK SHELL

Thank you for purchasing the Office Source Desk Shell.
Please follow these instructions for easy assembly.

1	2	3	4	5	6	7
Cam Lock 11 Pcs	Klix Cam 11 Pcs	Housing Cap (Long) 4 Pcs / Housing Cap (Short) 7 Pcs	Adjustable Glide 4 Pcs	6 Hole L-Bracket 5 Pcs	Screw #6 x 5/8" 30 Pcs	M4 x 65 Allen-Key 1 Pc

A	B	C	D
Top Panel	Back Panel	Left Side Panel	Right Side Panel

KLIX CAM INSTRUCTIONS

1	2	3
Line up Cam Lock, turn clockwise.	Insert the cam with the arrow pointing towards the hole in the edge.	Insert the Cam Lock into Klix Cam. Turn Klix Cam to lock.

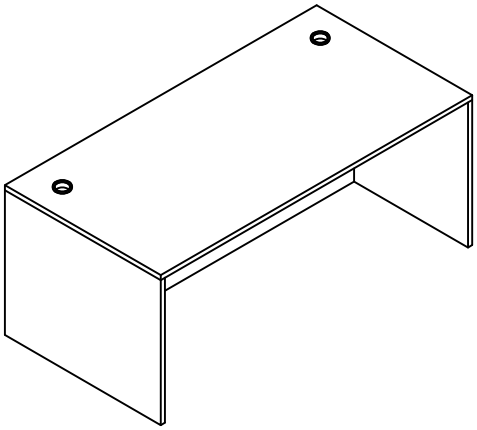

IMPORTANT :

- Place all wooden parts on a clean and smooth surface such as a rug or carpet to avoid the parts from being scratched.
- Check to be sure that you have all parts and hardware.
- Remove all wrapping materials, including staples & packing straps before you start to assemble.
- Do not tighten screws/bolts until the unit is completely assembled.
- Keep all hardware parts out of reach of children.

OfficeSource

PL 102GG, PL103GG, PL 105GG
DESK SHELL

1

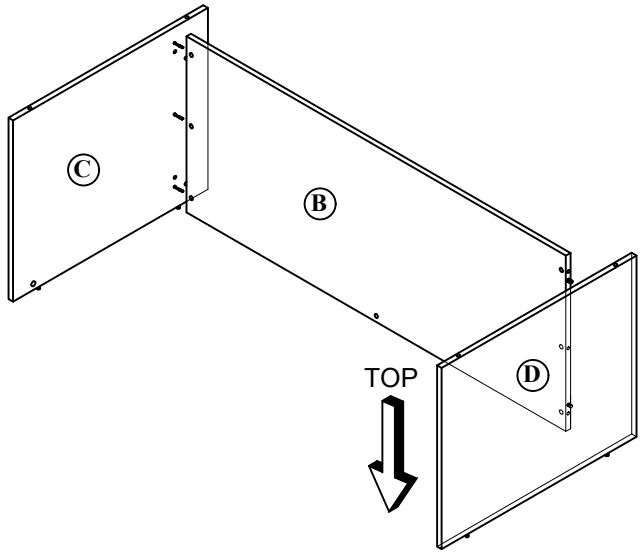

Turn Top Panel (A) upside down and insert Cam Lock pins (1) into top panel and into side panels (C,D). Insert Klix Cams (2) in Side Panels (C,D) and back panel (B). Attach Back Panel (B) to side panels (C,D) and Top Panel (A). Turn Klix Cam to tighten.

3

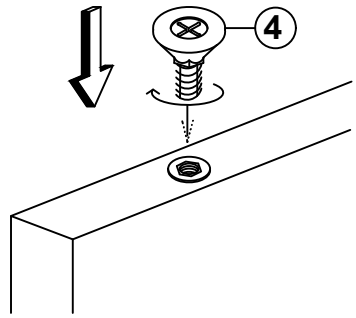

Screw Adjustable Glides(4) into bottom of Side Panel.

2

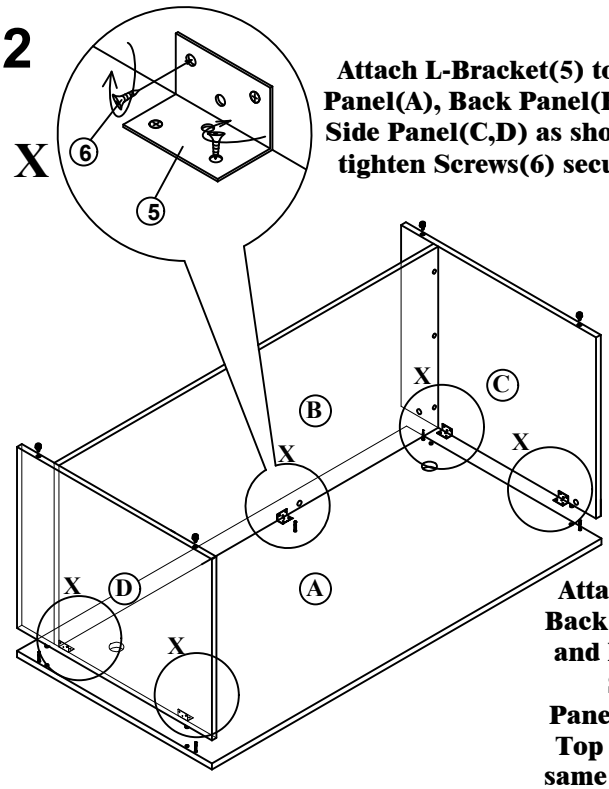

Attach L-Bracket(5) to Top Panel(A), Back Panel(B) and Side Panel(C,D) as shown by tighten Screws(6) securely.

Attach those Back Panel(B) and left right Side Panel(C,D) to Top Panel as same as Box 1.

4

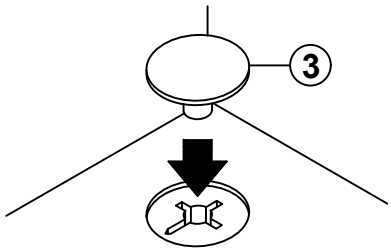

Attach Housing Cap(3) to each Klix Cam(2) by pushing the neck thought the center of the Klix Cam.